FUJITSU

CASSETTE TYPE AIR CONDITIONER

(25,000 / 30,000 BTU/h)

TECHNICAL MANUAL

splitoff.ru

Большая библиотека технической документации
http://splitoff.ru/tehn-doc.html
каталоги, инструкции, сервисные мануалы, схемы.

CONTENTS

1. FEATURES 2

2. OUTLINE AND DIMENSIONS 3
- 2.1 INDOOR UNIT 3
- 2.2 OUTDOOR UNIT 4
- 2.3 REMOTE CONTROLLER 5

3. DATA 6
- 3.1 PERFORMANCE CURVE 6
- 3.2 TEMPERATURE RANGE 7
- 3.3 ADDITIONAL REFRIGERANT CHARGE 7
- 3.4 AIR VELOCITY DISTRIBUTION 8
- 3.5 DUCT CONNECTION 10
- 3.6 REFRIGERANT SYSTEM DIAGRAM 11
- 3.7 NOISE LEVEL CHECK POINTS 13

4. SPECIFICATIONS 16

Все каталоги и инструкции здесь: http://splitoff.ru/tehn-doc.html

1. FEATURES

• Flexible installation

Small and compact body allows space saving installation

New mechanism allows the cassette body to move 35mm downward and contributes to keeping the ceiling surface clean

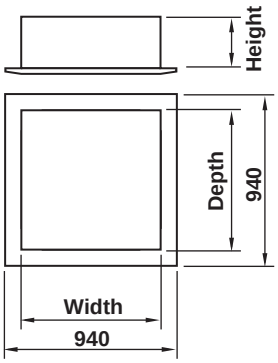

Setting space

Height	200 or 235
Width	840
Depth	840

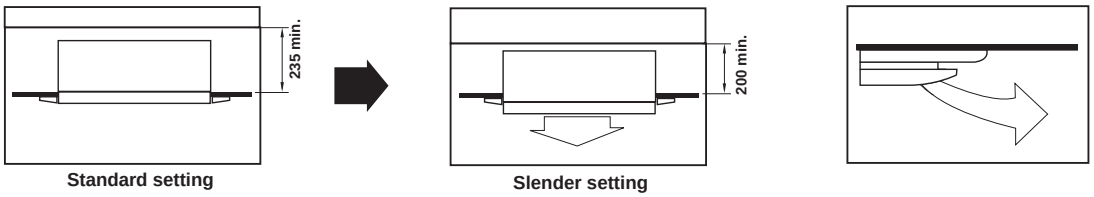

• Improvement of noise level and air distribution

Comparison of noise level (dB)

Noise level is drastically reduced by bigger caliber turbo-fan and larger air flow passage.

Improvement of fan blade

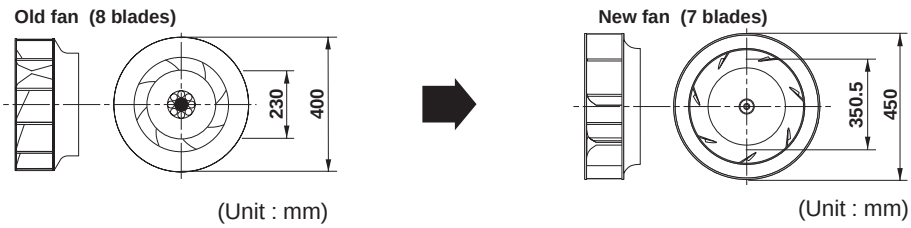

Wide air flow

Larger air flap distributes the outlet air flow a longer distance in the horizontal direction

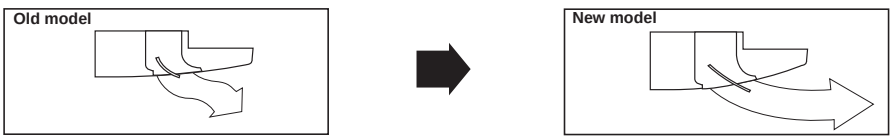

Все каталоги и инструкции здесь: http://splitoff.ru/tehn-doc.html

2. OUTLINE AND DIMENSIONS

2.1 INDOOR UNIT

(Unit : mm)

● MODELS : AU□25A, AU□25R, AU□30A, AU□30R

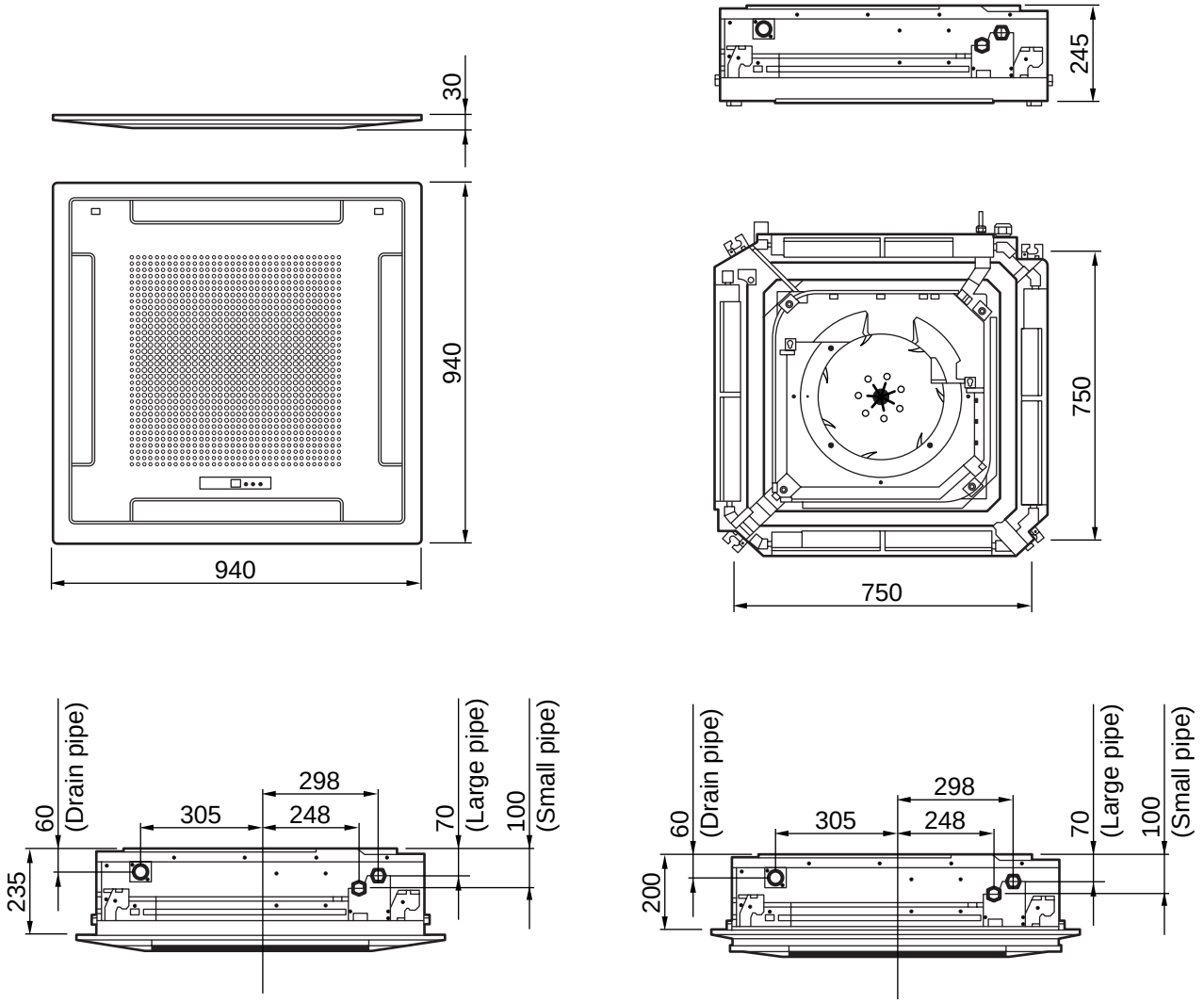

Note :

□ { Y : Europe version
T : Australia version

Все каталоги и инструкции здесь: http://splitoff.ru/tehn-doc.html

2.2 OUTDOOR UNIT

● MODELS : AO□25A, AO□25R (Unit : mm)

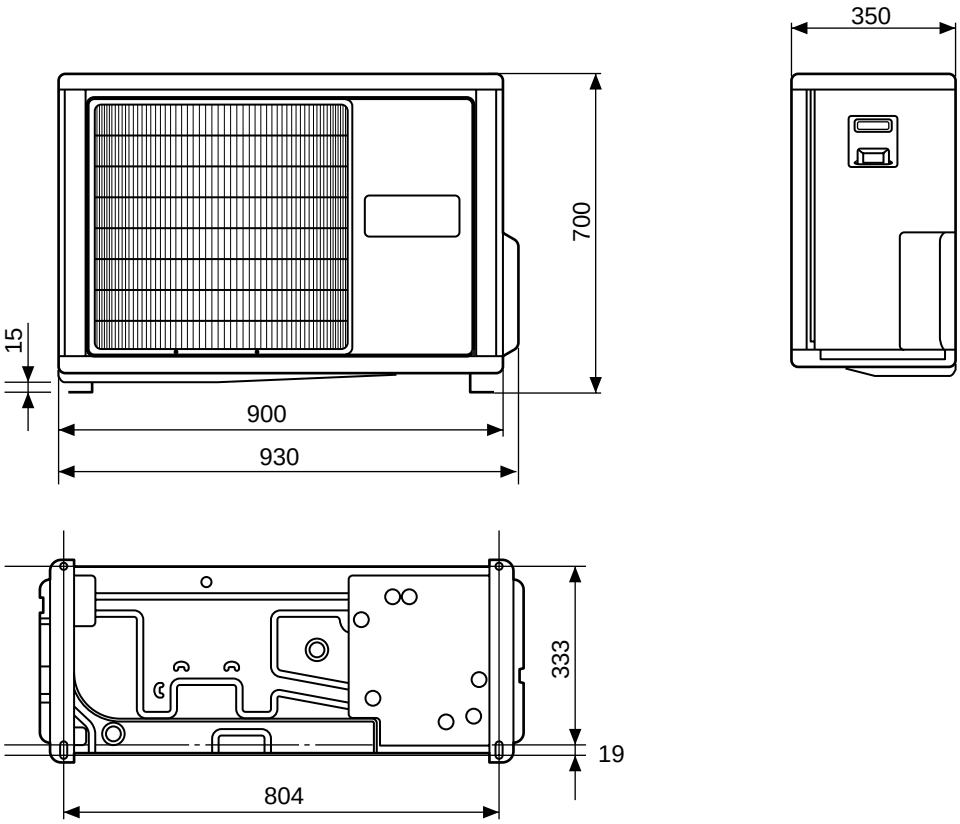

● MODELS : AO□30A, AO□30R

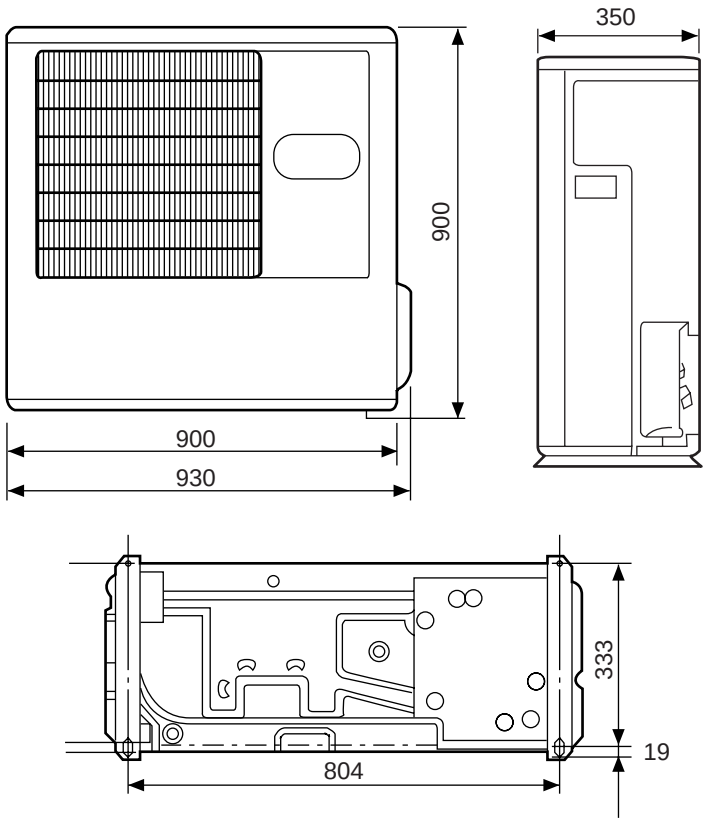

Все каталоги и инструкции здесь: http://splitoff.ru/tehn-doc.html

2.3 REMOTE CONTROLLER

WIRE REMOTE CONTROLLER WITH WEEKLY TIMER

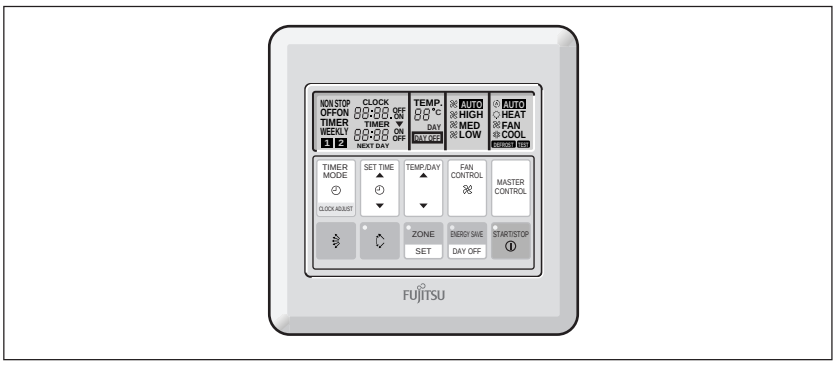

FEATURES

Three kinds of timer setup (OFF/ON/WEEKLY) are possible.

Function of weekly timer

Setting of different on-off time by day.

Setting of set on-off time twice a day.

Setting of time in 5 minute steps.

Timer operation of a reserved day can be temporarily cancelled by pushing the “DAY OFF” button.

Time setting can be left until the next day.

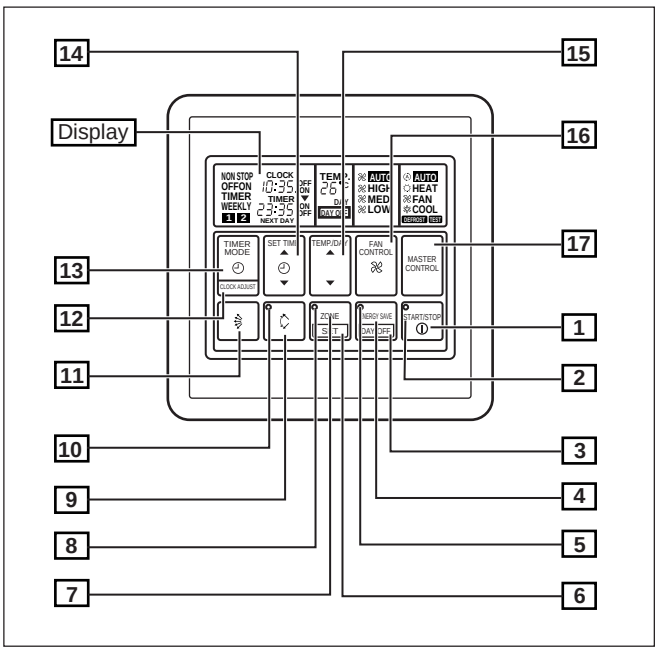

1 START/STOP Button
Pressed to start and stop operation.

2 OPERATION Lamp
Lights during operation and when the timer is on.

3 DAY OFF Button
Temporary cancellation of one day timer.

4 ENERGY SAVE Button
Turns energy efficient mode on and off.

5 ENERGY SAVE Lamp
Lights up when the unit is in the energy save mode.

6 SET Button
Sets the date, hour minute and on-off time.

7 ZONE Button
Use to turn the zone control on and off.

8 ZONE Lamp
Lights up when the units is in the zone control mode.

9 VERTICAL SWING Button

10 VERTICAL SWING Lamp

11 VERTICAL AIR FLOW DIRECTION Button

12 CLOCK ADJUST Button

13 TIMER MODE Button
Changes the timer mode (NON STOP, OFF TIMER, ON TIMER, WEEKLY TIMER).

14 SET TIME Button
Sets the current time and on-off time.

15 TEMP./DAY Button
Sets the indoor temperature / days.

16 FAN CONTROL Button
Selects the fan speed (AUTO, HIGH, MED, LOW).

17 MASTER CONTROL Button
Selects the operating mode (AUTO, HEAT, FAN, COOL).

18 Clock Display

19 Set Temperature / Day Display (TEMP./DAY)

20 Operation Mode Display

21 Timer Mode Display

22 Fan Speed Display

23 DEFROST Display

24 TEST Display

Display panel

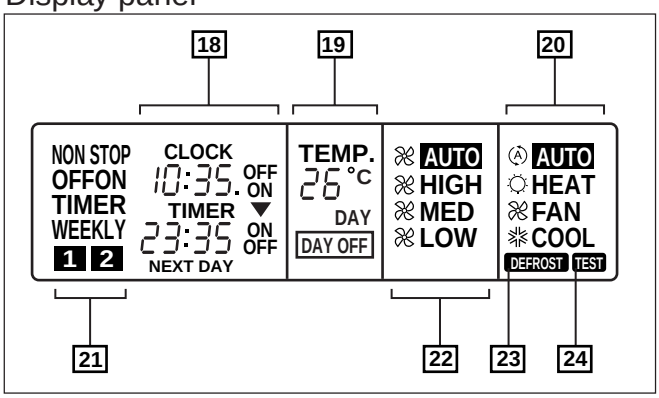

Все каталоги и инструкции здесь: http://splitoff.ru/tehn-doc.html

3. DATA

3.1 PERFORMANCE CURVE

AU□25A, AU□30A

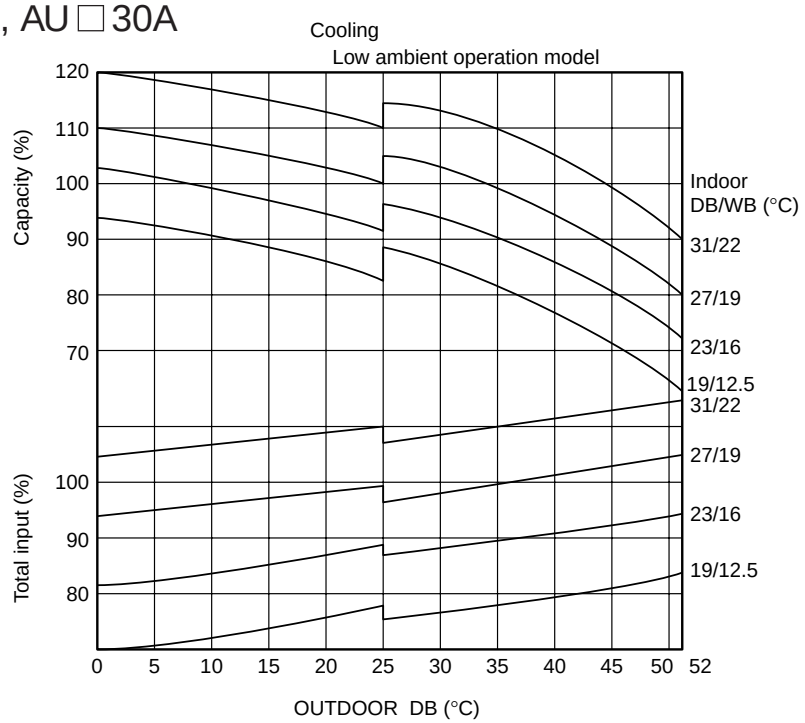

AU□25R, AU□30R

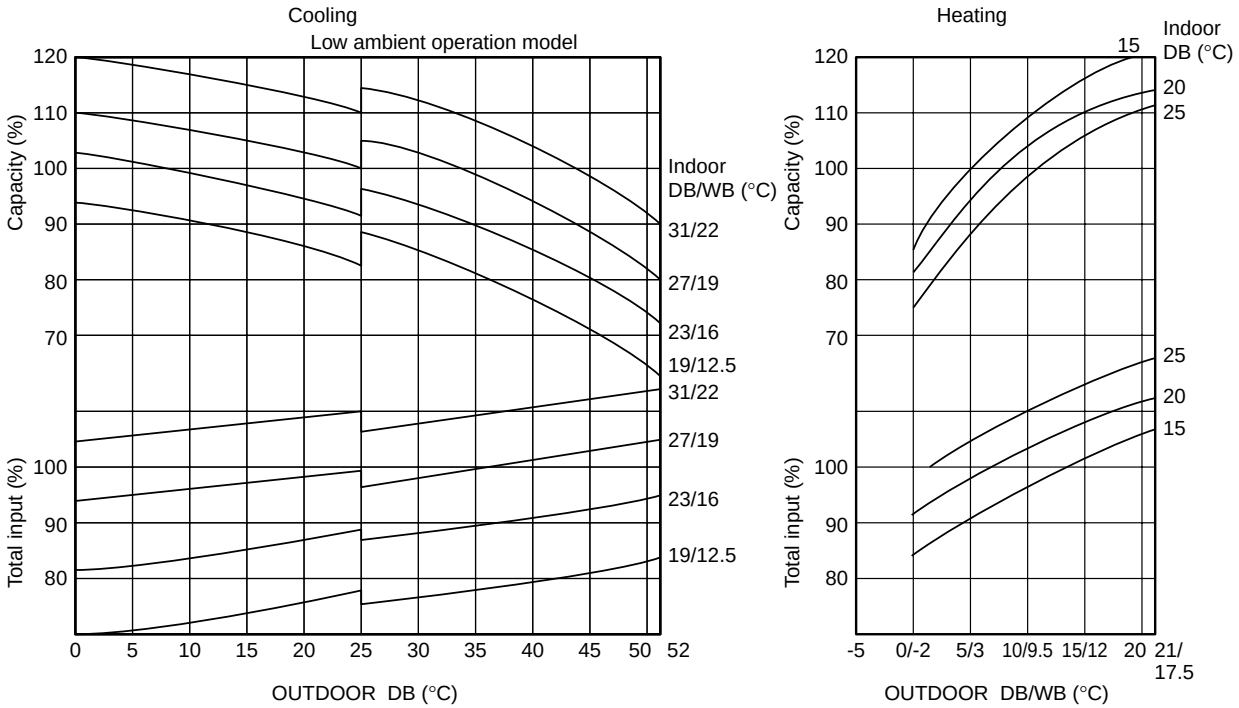

Все каталоги и инструкции здесь: http://splitoff.ru/tehn-doc.html

3.2 TEMPERATURE RANGE

MODEL		TEMPERATURE RANGE	
		Indoor Unit	Outdoor Unit
AU□25A	COOL	18°C to 32°C	0°C to 52°C
AU□30A			
AU□25R AU□30R	COOL	18°C to 32°C	0°C to 52°C
	HEAT	30°C or less	–5°C to 21°C

3.3 ADDITIONAL REFRIGERANT CHARGE

PIPE LENGTH		5m (16ft)	7.5m (25ft)	10m (33ft)	15m (49ft)	20m (66ft)	25m (82ft)	30m (99ft)	Additional refrigerant
FULL CHARGE AMOUNT	AU□25A	2,000g(70.5oz)	2,030g(71.6oz)	2,060g(72.7oz)	2,120g(74.8oz)	2,180g(76.9oz)	2,240g(79.0oz)	———	12g/m (0.4oz/3.3ft)
	AU□25R	2,100g(74.1oz)	2,225g(78.5oz)	2,350g(82.9oz)	2,600g(91.7oz)	2,850g(100.5oz)	3,100(109.3oz)	———	50g/m (1.41oz/3.3ft)
	AU□30A	2,650g(93.5oz)		2,693g(95.0oz)	2,778g(98.0oz)	2,831g(99.9oz)	2,916g(102.9oz)	3,001g(105.9oz)	17g/m (0.6oz/3.3ft)
	AU□30R	2,700g(95.2oz)		2,825g(99.6oz)	3,075g(108.5oz)	3,325g(117.3oz)	3,575g(126.1oz)	———	50g/m (1.41oz/3.3ft)

AU□25A, AU□25R, AU□30A, AU□30R

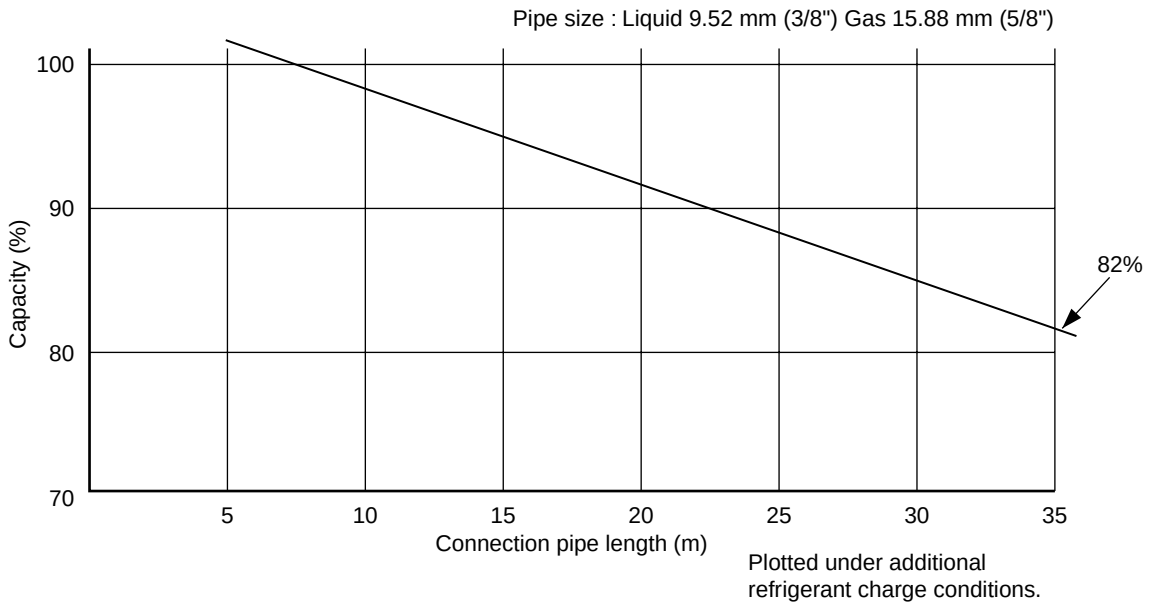

Все каталоги и инструкции здесь: http://splitoff.ru/tehn-doc.html

3.4 AIR VELOCITY DISTRIBUTION

AU□25A, AU□25R

4–WAY AIR OUTLET

UNIT : m/s

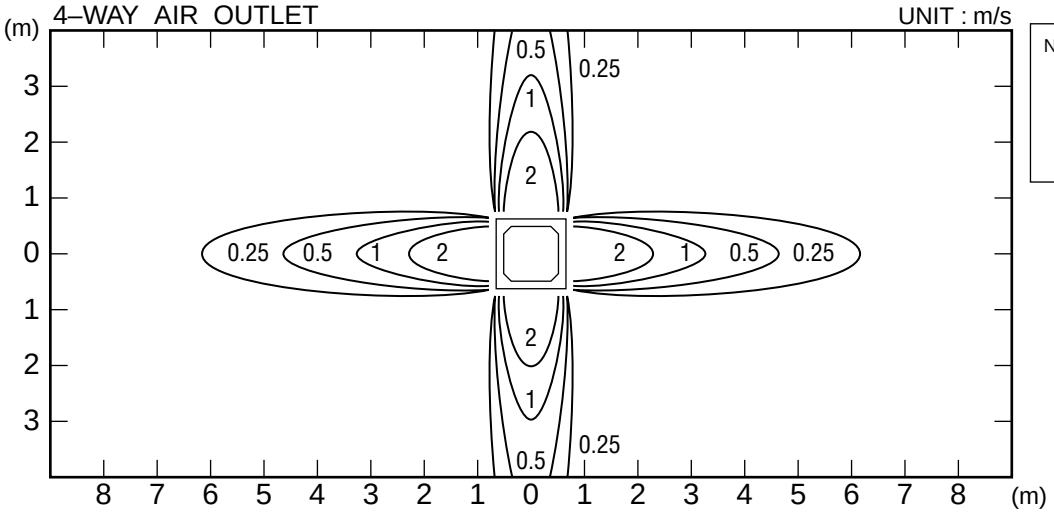

Note :
Condition
Fan speed : High
Operation mode : FAN
Voltage : 240V

TOP VIEW
AIR FLOW DIRECTION
: Upward

UNIT : m/s

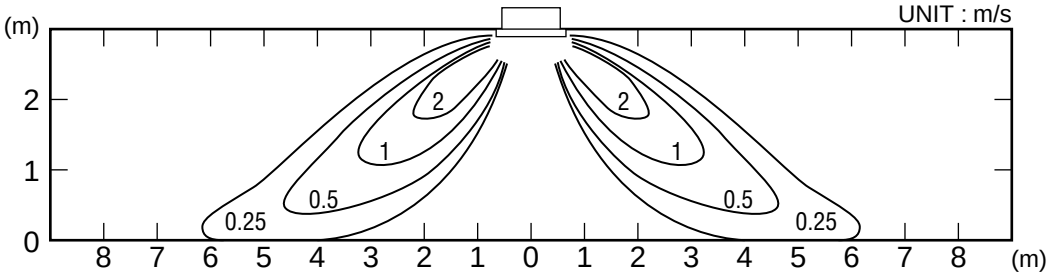

SIDE VIEW
AIR FLOW DIRECTION
: Upward

UNIT : m/s

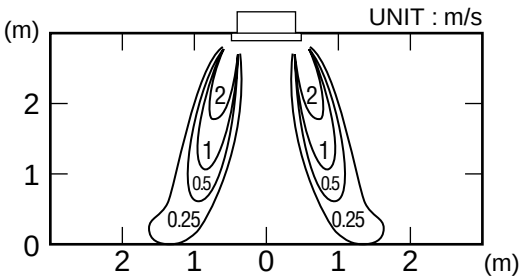

SIDE VIEW
HORIZONTAL LOUVER
: Downward

2–WAY AIR OUTLET

UNIT : m/s

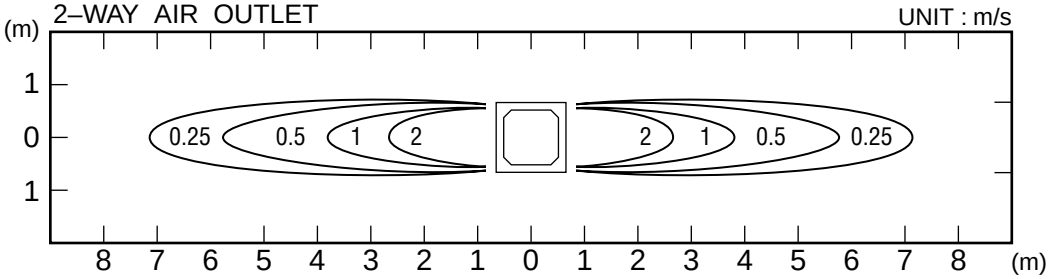

TOP VIEW
AIR FLOW DIRECTION
: Upward

UNIT : m/s

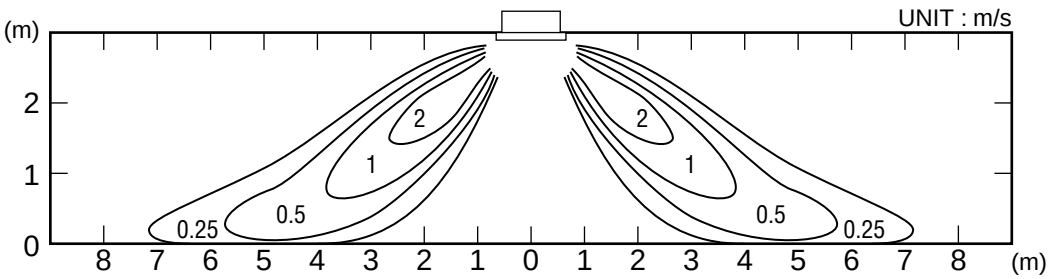

SIDE VIEW
AIR FLOW DIRECTION
: Upward

Все каталоги и инструкции здесь: http://splitoff.ru/tehn-doc.html

AU□30A, AU□30R

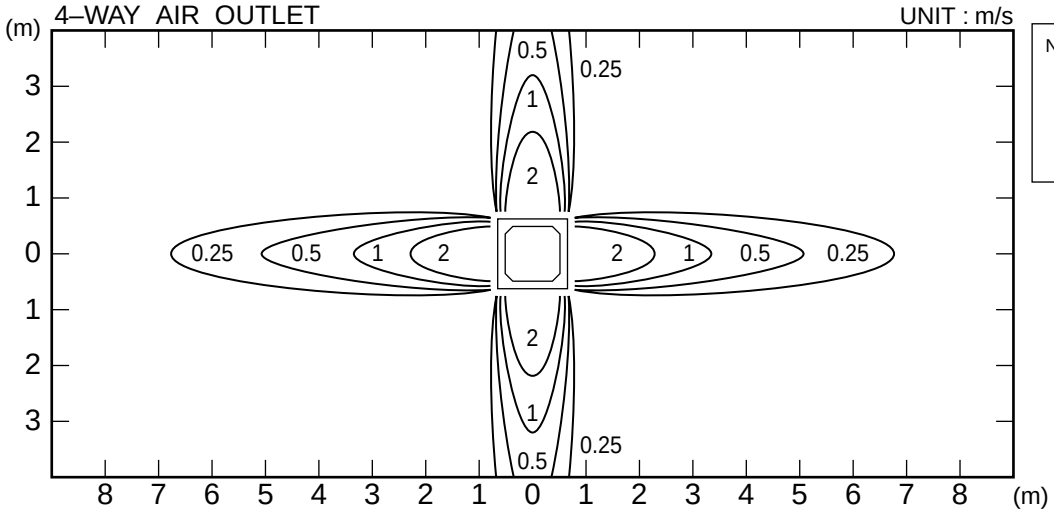

Note :
Condition
Fan speed : High
Operation mode : FAN
Voltage : 240V

TOP VIEW
AIR FLOW DIRECTION
: Upward

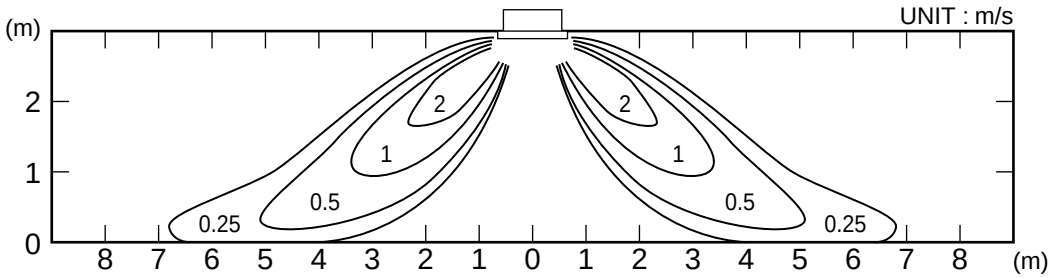

SIDE VIEW
AIR FLOW DIRECTION
: Upward

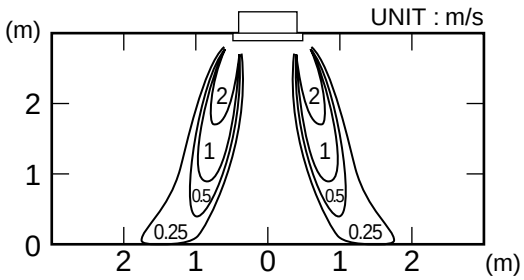

SIDE VIEW
HORIZONTAL LOUVER
: Downward

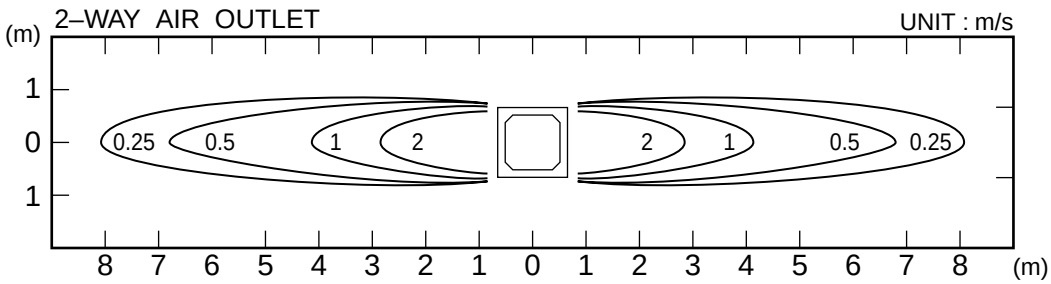

TOP VIEW
AIR FLOW DIRECTION
: Upward

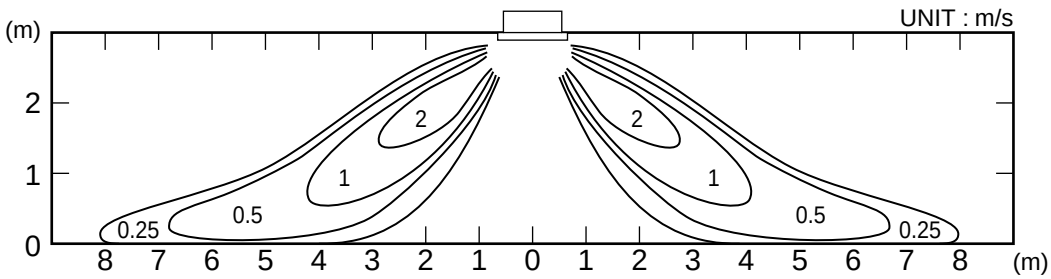

SIDE VIEW
AIR FLOW DIRECTION
: Upward

Все каталоги и инструкции здесь: http://splitoff.ru/tehn-doc.html

3.5 DUCT CONNECTION

OUTLET AIR

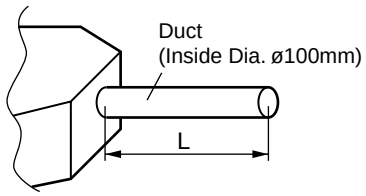

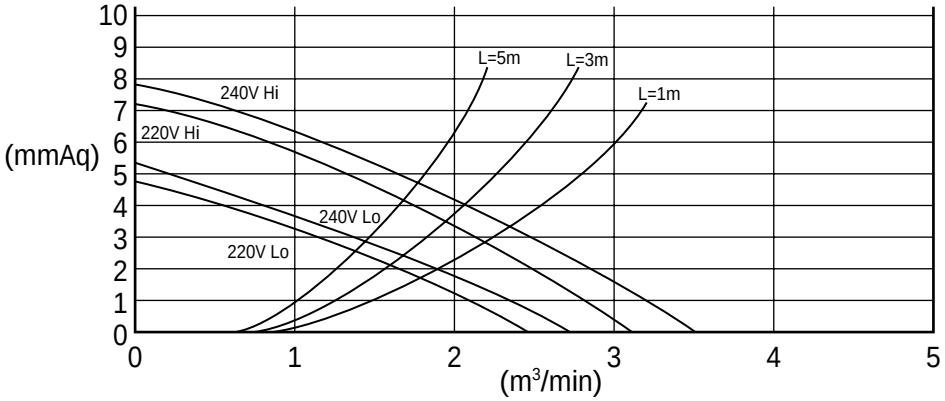

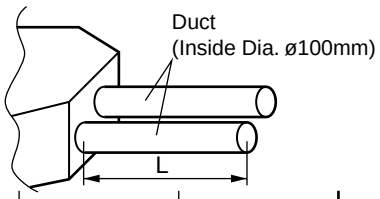

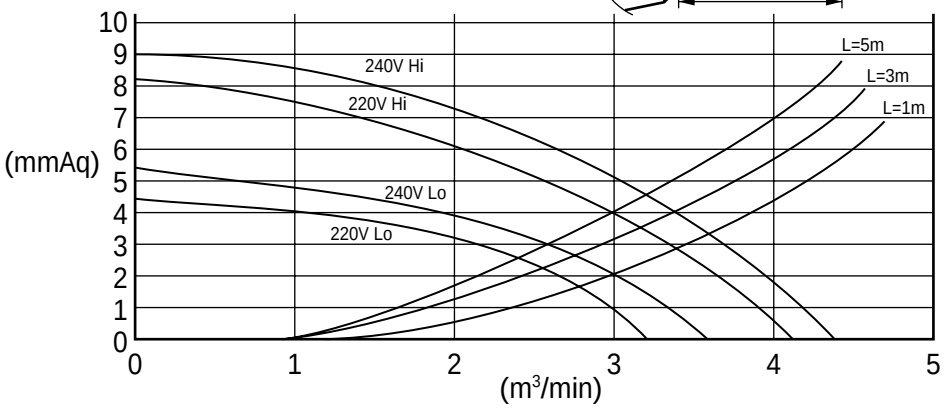

FRESH AIR

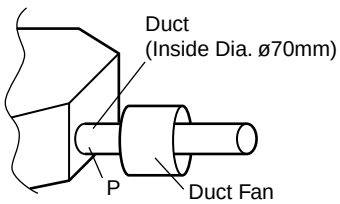

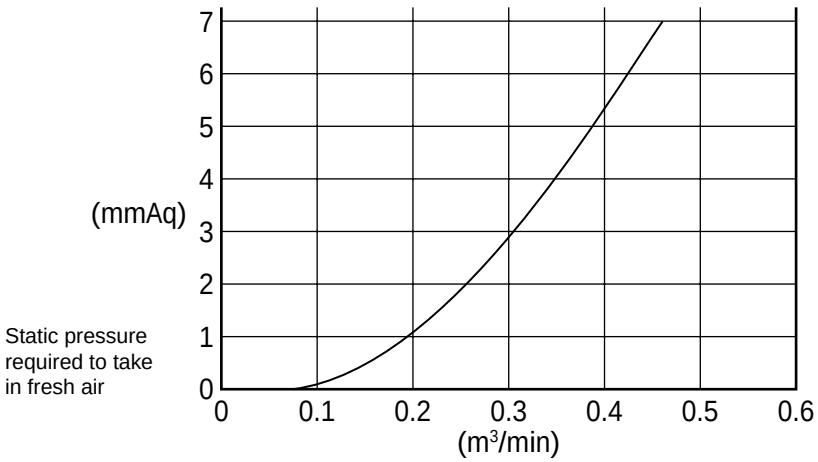

Все каталоги и инструкции здесь: http://splitoff.ru/tehn-doc.html

3.6 REFRIGERANT SYSTEM DIAGRAM

Models : AU□25A / AO□25A

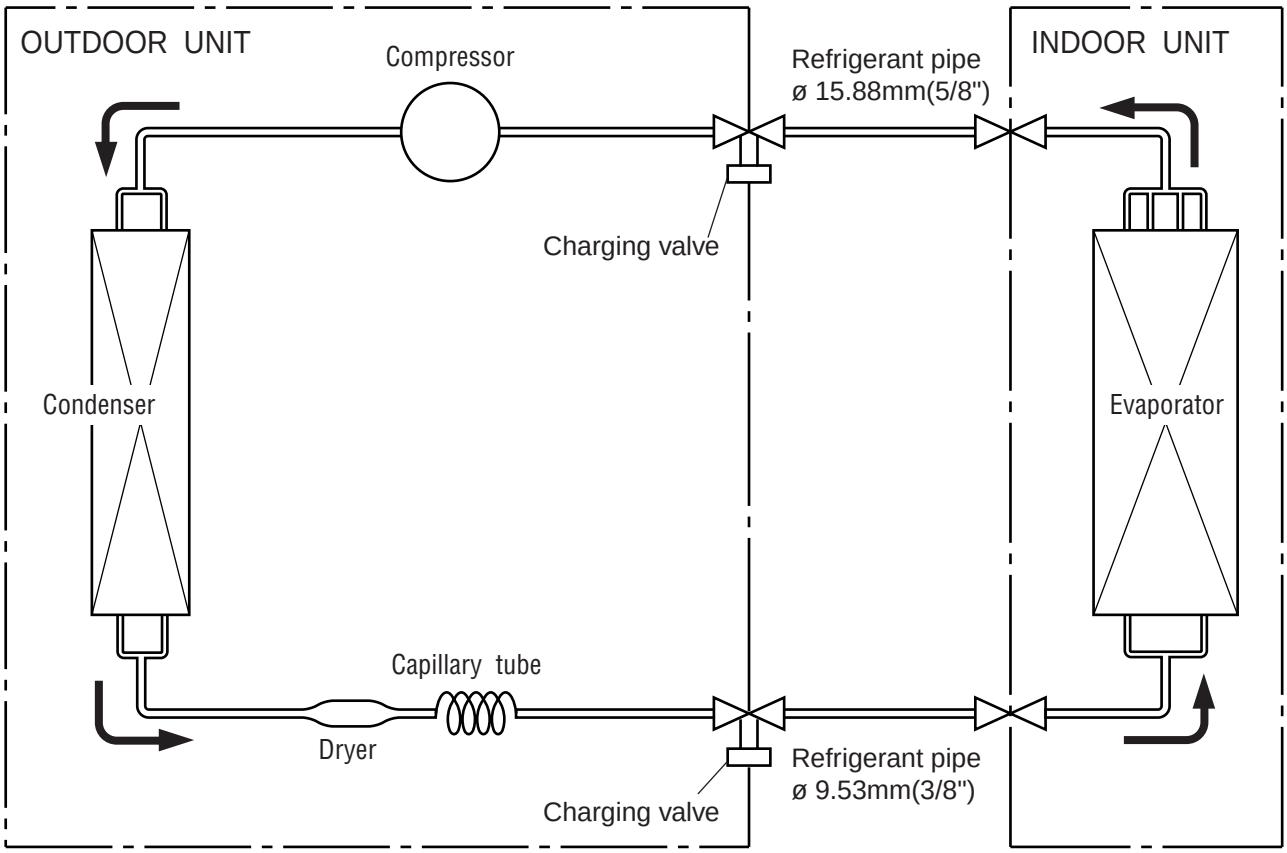

Models : AU□25R / AO□25R

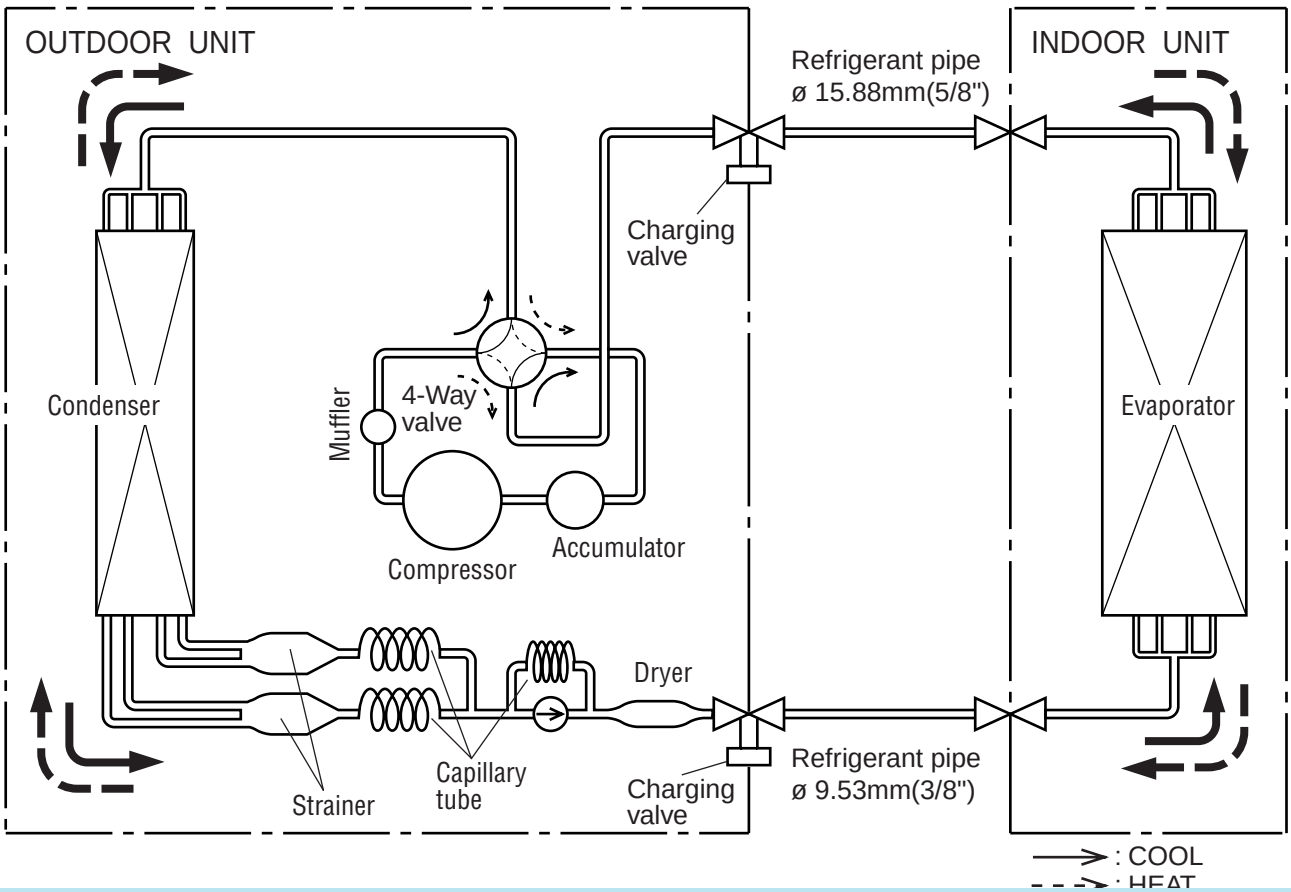

Все каталоги и инструкции здесь: http://splitoff.ru/tehn-doc.html

Models : AU□30A / AO□30A

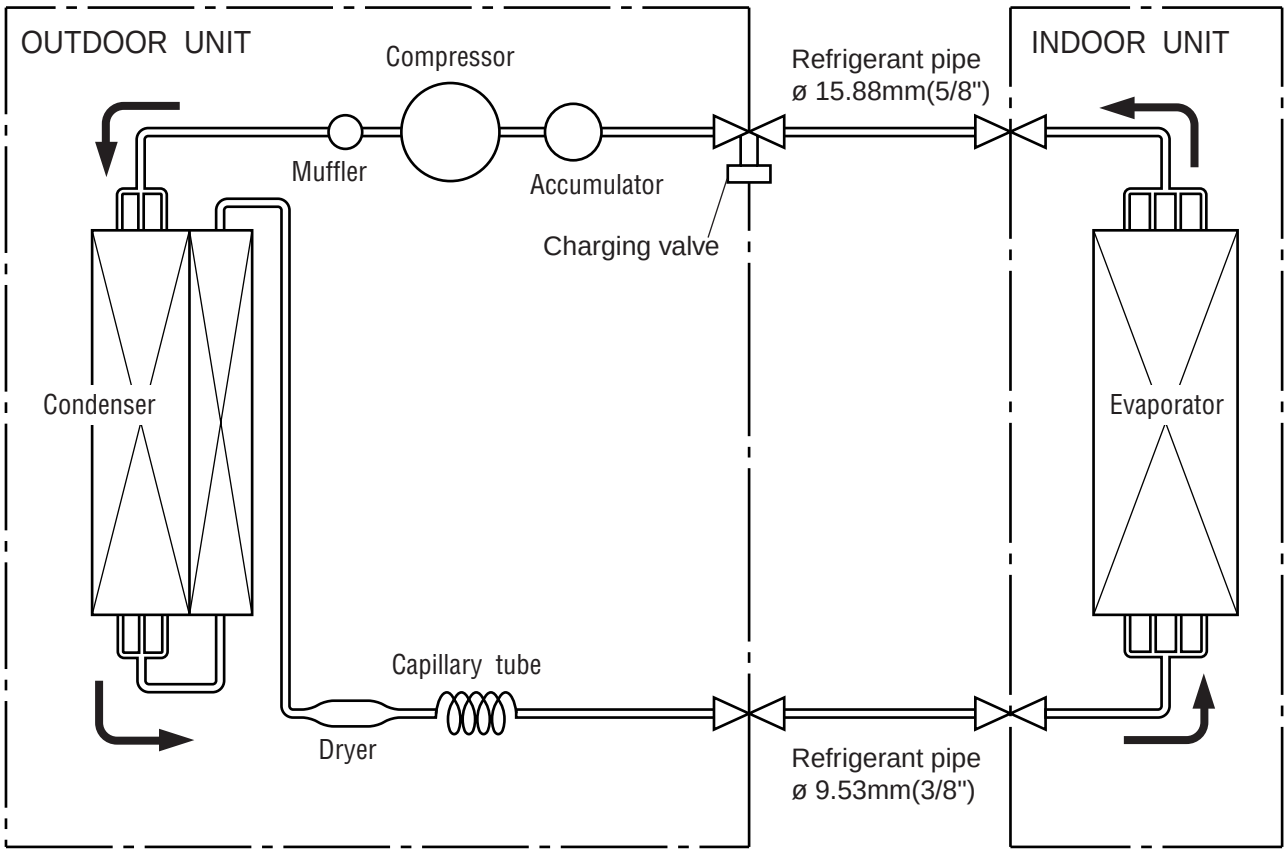

Models : AU□30R / AO□30R

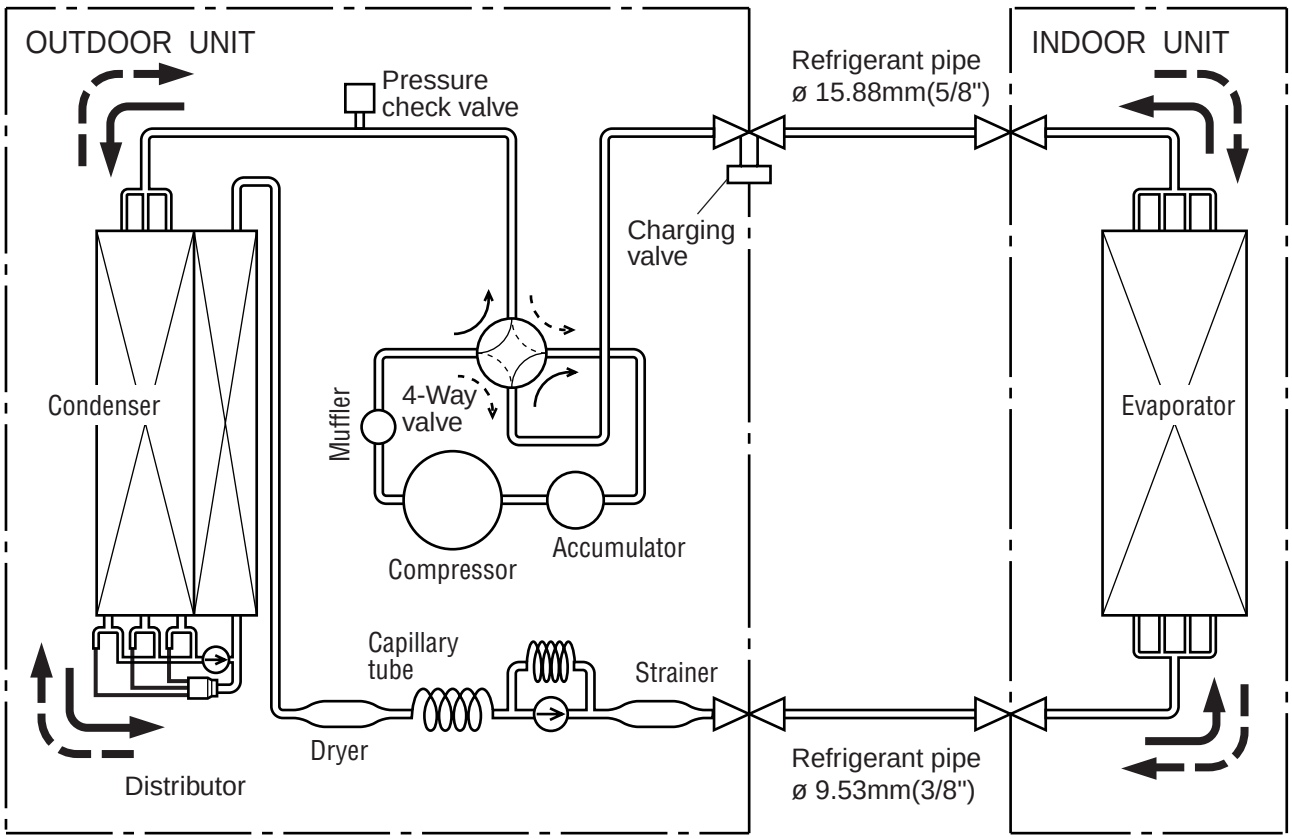

Все каталоги и инструкции здесь: http://splitoff.ru/tehn-doc.html

3.7 NOISE LEVEL CHECK POINTS

INDOOR UNIT

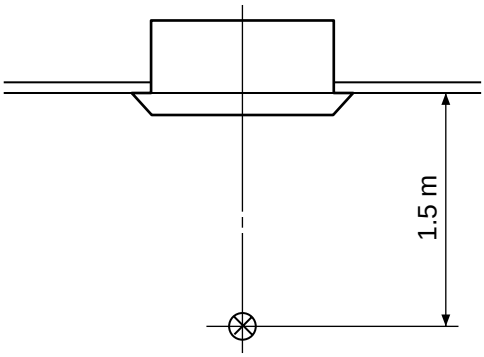

OUTDOOR UNIT

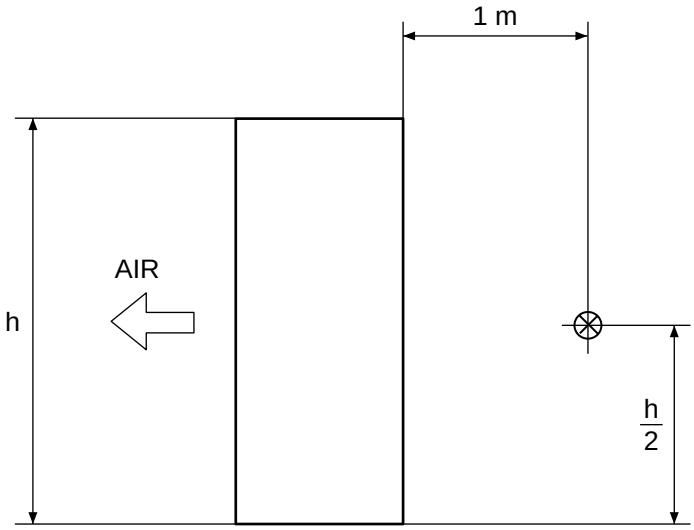

Все каталоги и инструкции здесь: http://splitoff.ru/tehn-doc.html

AU□25A, AU□25R

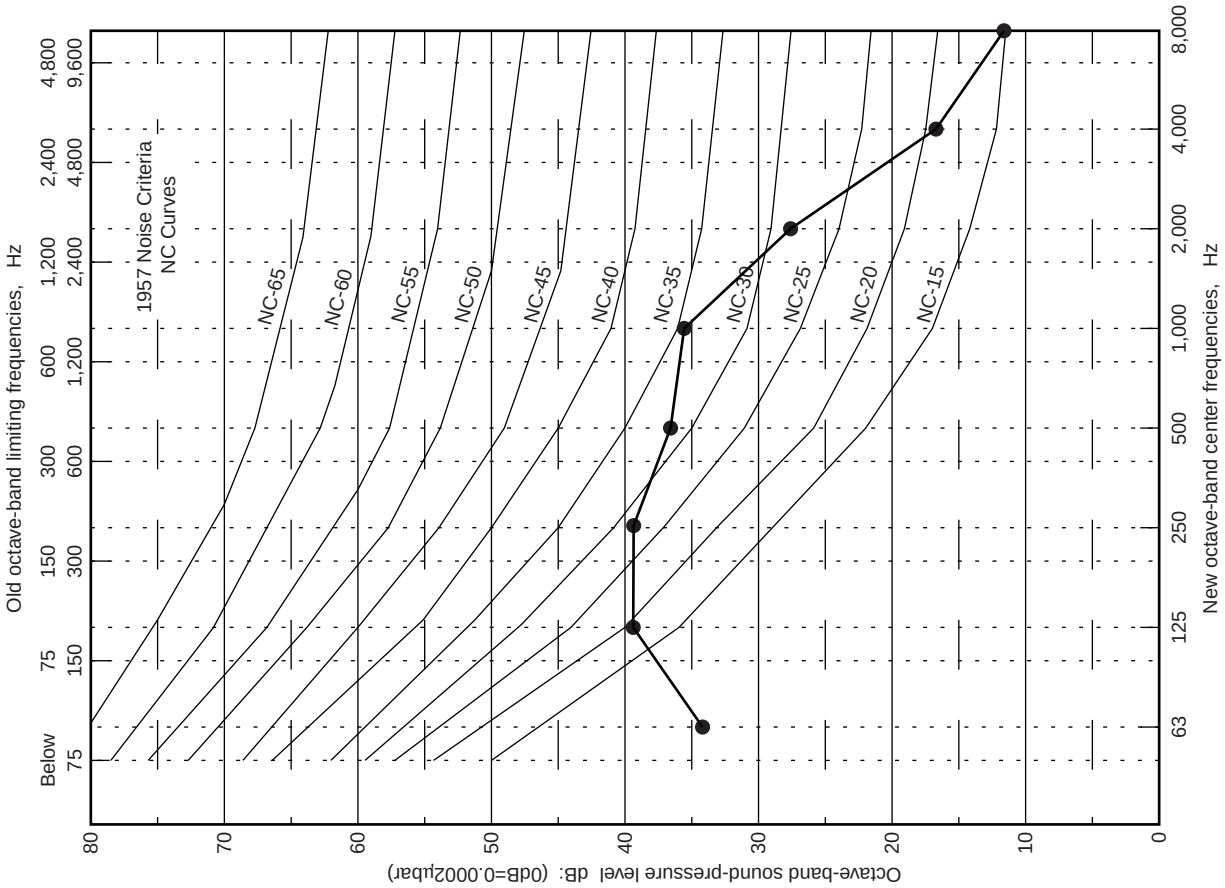

AU□30A, AU□30R

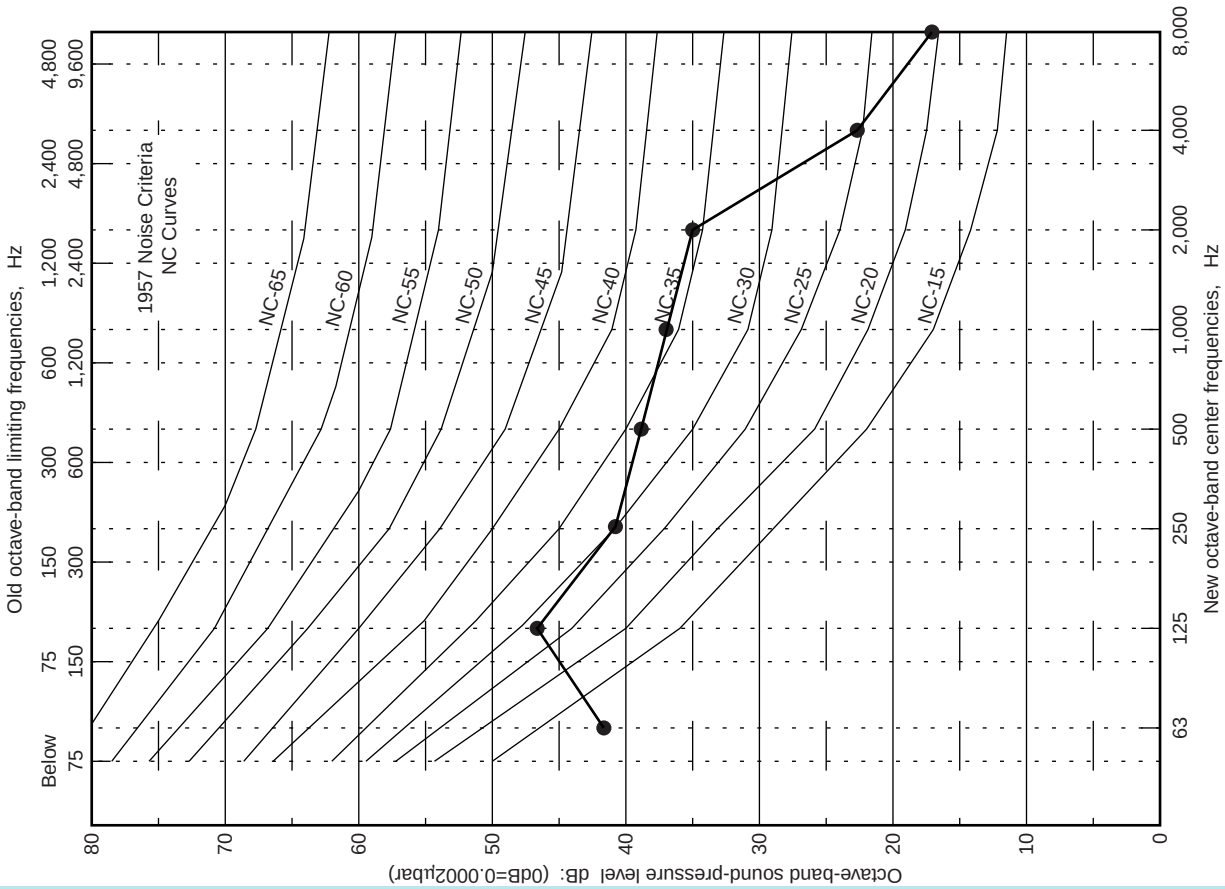

Все каталоги и инструкции здесь: http://splitoff.ru/tehn-doc.html

AO□25A, AO□25R

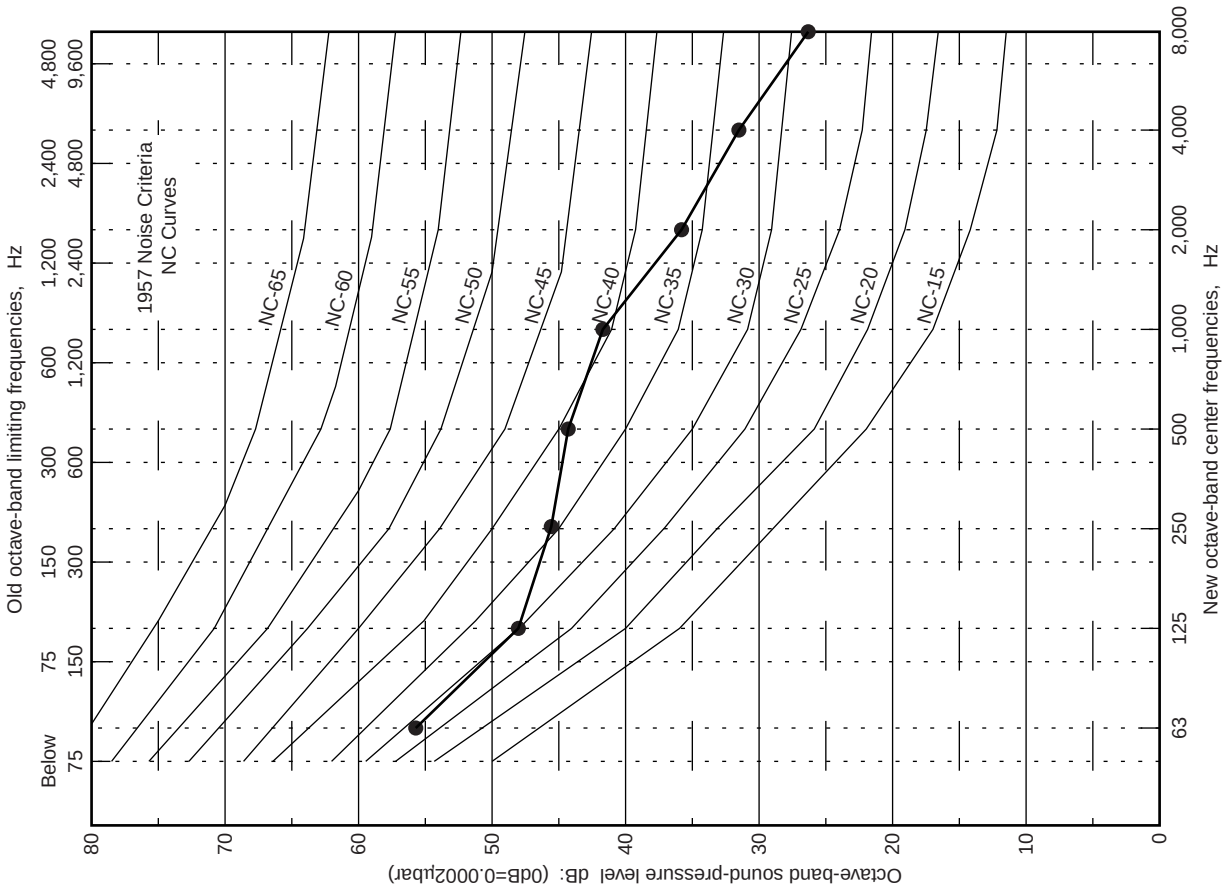

AO□30A, AO□30R

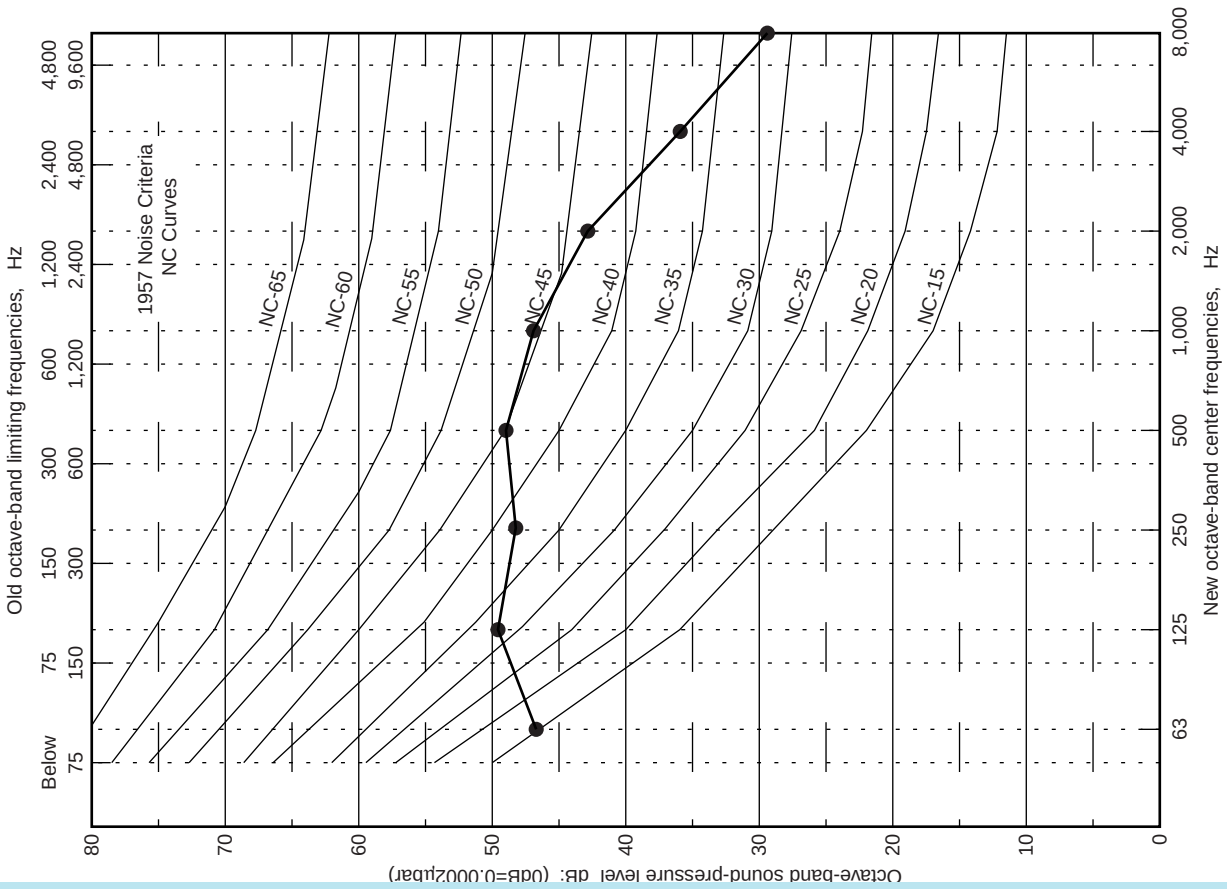

Все каталоги и инструкции здесь: http://splitoff.ru/tehn-doc.html

4. SPECIFICATIONS

[EUROPE]

TYPE			COOLING TYPE		COOLING & HEATING TYPE	
MODEL		IN	AUY25ALC-W	AUY30ALC-W	AUY25RLC-W	AUY30RLC-W
		OUT	AOY25AZCL	AOY30ABML	AOY25RZCL	AOY30RBML
POWER SOURCE		V/Φ/Hz	220-240/1/50	220-240/1/50	220-240/1/50	220-240/1/50
COOLING CAPACITY		kW	7.0 - 7.1	8.6 - 8.8	6.95 - 7.05	8.6 - 8.8
HEATING CAPACITY		kW	——	——	7.75 - 8.00	8.8 - 9.1
RUNNING CURRENT (A)		COOLING	12.8 - 13.2	15.8 - 16.3	12.9 - 13.0	16.0 - 16.5
		HEATING	——	——	12.0 - 12.3	16.0 - 16.5
INPUT WATTS (kW)		COOLING	2.64 - 2.77	3.30 - 3.40	2.70 - 2.80	3.35 - 3.45
		HEATING	——	——	2.50 - 2.60	2.90 - 3.00
STARTING CURRENT		A	61	80	61	80
MOISTURE REMOVAL		ℓ/h	2.5	4	2.5	4
E.E.R. (kW/kW)		COOLING	2.65 - 2.56	2.61 - 2.59	2.57 - 2.52	2.57 - 2.55
		HEATING	——	——	3.10 - 3.08	3.03 - 3.03
FAN SPEED (r.p.m.)		HIGH	490	560	490	560
		MED	430	480	430	480
		LOW	360	390	360	390
		OUTER	720	730	720	760
AIR FLOW	INDOOR	m^3/h	1,100	1,300	1,100	1,300
	OUTDOOR		3,000	3,320	3,000	3,450
NOISE LEVEL (dB[A])	INDOOR	HIGH	43	45	43	45
		MED	40	42	40	42
		LOW	37	39	37	39
	OUTDOOR		51	54.5	51	56
DIMENSIONS H x W x D (mm)	NET	IN	246 x 830 x 830			
		GRILLE	35 x 940 x 940			
		OUT	700 x 900 x 350	900 x 900 x 350	700 x 900 x 350	900 x 900 x 350
	GROSS	IN	355 x 1,060 x 1,025			
		OUT	783 x 1,025 x 445	1,045 x 1,025 x 445	783 x 1,025 x 445	1,045 x 1,025 x 445
WEIGHTS [NET/GROSS] (kg)		IN	34 / 44			
		OUT	67 / 77	85 / 97	70 / 80	85 / 97
MAXIMUM PIPE LENGTH / HEIGHT			25 / 15	30 / 15	25 / 15	25 / 15
REMOTE CONTROLLER TYPE			WIRED			

Все каталоги и инструкции здесь: http://splitoff.ru/tehn-doc.html

[AUSTRALIA]

TYPE			COOLING TYPE		COOLING & HEATING TYPE	
MODEL		IN	AUT25ALC-W	AUT30ALC-W	AUT25RLC-W	AUT30RLC-W
		OUT	AOT25AZCL	AOT30ABML	AOT25RZCL	AOT30RBML
POWER SOURCE		V/Φ/Hz	240-(220)/1/50	240-(220)/1/50	240-(220)/1/50	240-(220)/1/50
COOLING CAPACITY		kW	7.1	8.8	7.05	8.8
HEATING CAPACITY		kW	——	——	8.00	9.1
RUNNING CURRENT (A)		COOLING	13.2	16.3	13.0	16.5
		HEATING	——	——	12.3	16.5
INPUT WATTS (kW)		COOLING	2.77	3.40	2.80	3.45
		HEATING	——	——	2.60	3.00
STARTING CURRENT		A	43	43	43	80
MOISTURE REMOVAL		ℓ/h	2.5	4	2.5	4
E.E.R. (kW/kW)		COOLING	2.56	2.59	2.52	2.55
		HEATING	——	——	3.08	3.03
FAN SPEED (r.p.m.)		HIGH	490	560	490	560
		MED	430	480	430	480
		LOW	360	390	360	390
		OUTER	720	730	720	760
AIR FLOW	INDOOR	m^3/h	1,100	1,300	1,100	1,300
	OUTDOOR		3,000	3,320	3,000	3,450
NOISE LEVEL (dB[A])	INDOOR	HIGH	43	45	43	45
		MED	40	42	40	42
		LOW	37	39	37	39
	OUTDOOR		51	54.5	51	56
DIMENSIONS H x W x D (mm)	NET	IN	246 x 830 x 830			
		GRILLE	35 x 940 x 940			
		OUT	700 x 900 x 350	900 x 900 x 350	700 x 900 x 350	900 x 900 x 350
	GROSS	IN	355 x 1,060 x 1,025			
		OUT	783 x 1,025 x 445	1,045 x 1,025 x 445	783 x 1,025 x 445	1,045 x 1,025 x 445
WEIGHTS [NET/GROSS] (kg)		IN	34 / 44			
		OUT	67 / 77	85 / 97	70 / 80	85 / 97
MAXIMUM PIPE LENGTH / HEIGHT			25 / 15	30 / 15	25 / 15	25 / 15
REMOTE CONTROLLER TYPE			WIRED			

Все каталоги и инструкции здесь: http://splitoff.ru/tehn-doc.html

FUJITSU GENERAL (Euro) GmbH

A SUBSIDIARY OF FUJITSU GENERAL LIMITED

Werftstraße 20, D-40549 Düsseldorf, F.R. Germany TEL : (49) 211 50098 0

FUJITSU GENERAL (U.K.) CO. LIMITED

A SUBSIDIARY OF FUJITSU GENERAL LIMITED

Ground Floor, Elstree House, Elstree Way, Borehamwood, Herts WD6 1LS United Kingdom

TEL : (44) 181 421 7000

FUJITSU GENERAL(AUST.) PTY LIMITED

ACN 001 229 554

A SUBSIDIARY OF FUJITSU GENERAL LIMITED

HEAD OFFICE

SYDNEY :	100 Holbeche Road, Arndell Park, N.S.W. 2148	TEL: (02) 8822 2500
MELBOURNE :	Unit 7, 14 Lionel Road, Mount Waverley, VIC. 3149 (also all Tasmanian enquiries)	TEL: (03) 9543 5899
BRISBANE :	Suite 1, Level 5, 301 Coronation Drive, Milton, QLD. 4064	TEL: (07) 3367 2008
ADELAIDE :	146 Fullarton Road, Rose Park, S.A. 5067	TEL: (08) 8364 0588
PERTH :	Suite 3, 5 Mumford Place, Balcatta W.A. 6021	TEL: (08) 9240 5877

FUJITSU GENERAL NEW ZEALAND LIMITED

A SUBSIDIARY OF FUJITSU GENERAL LIMITED

HEAD OFFICE

WELLINGTON : Level 1, 8-10 Fitzherbert Street, Petone, New Zealand TEL: (04) 568 8761

0101J-907-1794 January 2001 Printed in Japan

splitoff.ru

Большая библиотека технической документации
http://splitoff.ru/tehn-doc.html
каталоги, инструкции, сервисные мануалы, схемы.